Spirit-4.1-AMT

10+16mm Material

www.oaudio.de
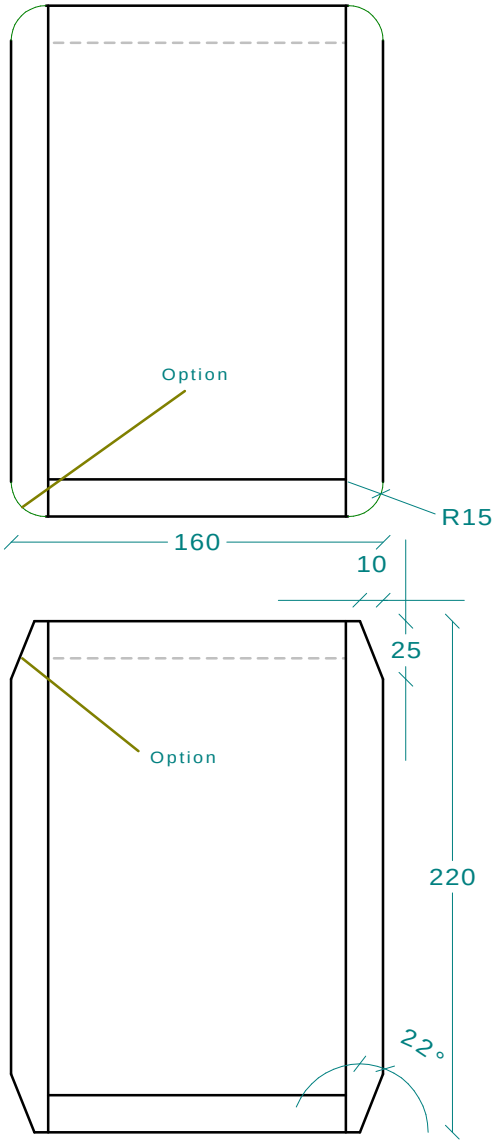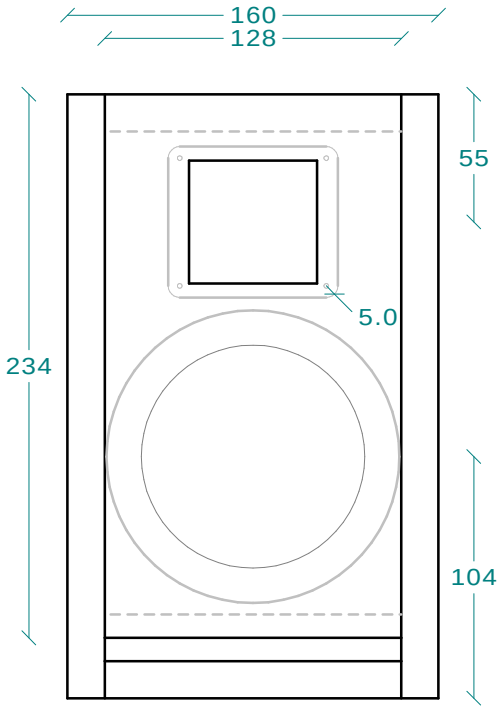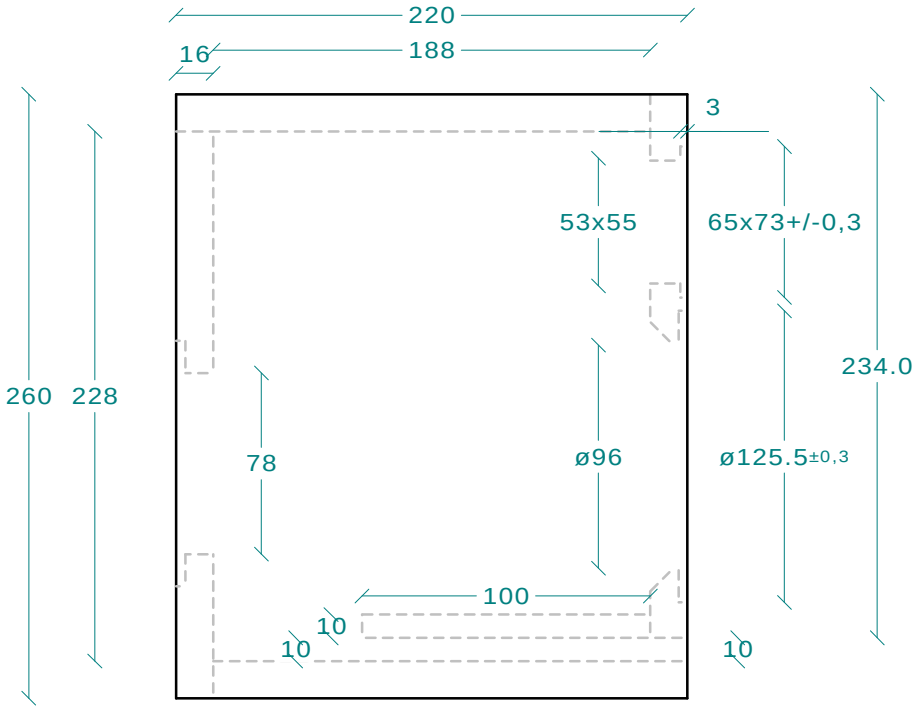
(c)Niklas Baur, blue planet acoustic